Technical information
Explosion drawing and parts list

LR46L Orbital sander (Ref. 4600200)
(*) Parts not mounted in the current version

Pos.	Code	Vrs.	Serie	Item
1	4626154			SPRING
2	1910002			BALL BEARING 608-ZZ
3	2015043			SWITCH
4	2070043			PAN HD. TAPPING SCREW 8X57
5	2079001			SCREW D.4x20 (TX)
6	2079002			SCREW D.4x16 (TX)
7	2404188			BUSHING D.22
8	3883002			WASHER AET D.4.3
9	4302025			CORD CLAMP
10	4424004			WASHER
11	4602379			CANOPY
12	4602380			FAN DEFLECTOR
13	4602385	E0	13684	PUSH BUTTON (V2)
* 13 -	4646374			PUSH BUTTON W/LOCK ASS'Y (V2)
14	4622530	D0	11296	COLUMN
* 14 -	4645855			SET OF COLUMNS ASS'Y (SPARE)
15	4602396			HOUSING
16	4602397			HOUSING COVER
17	4602398			SWITCH LOCKING
18	4602399			DUST BAG ADAPTOR
19	4602431			MOVABLE BASE
20	4606258			BOTTOM PLATE
21	4606287			BALANCE WEIGHT (2 mm ORBIT)
22	4610038			BALL BEARING 6002-RS
23	4610039			BALL BEARING 6004-2RS
24	4617037	A1	4041	CARBON BRUSHES SET (110 V)
24 -	4617031			CARBON BRUSHES SET
25	4619270			LABEL
26	4622324			BUSHING
27	4622359			BEARING HOLDER
28	4623301			COVER
29	4626130			SPRING
30	4633144			BEARING HOLDER D.42
31	4645382			BRUSHES HOLDER
33	4646374			PUSH BUTTON W/LOCK ASS'Y (V2)
34	4645495			CORD ASS'Y (EUROPE)
34 -	4645505			CORD ASS'Y (USA)
35	4650140			WIRING (STATOR-SWITCH)(LONG)
36	4651137			ARMATURE ASS'Y 230 V.
36 -	4651154			ARMATURE ASS'Y 120 V.
37	4655146			STATOR ASS'Y 230 V.
37 -	4655152			STATOR ASS'Y 120 V.
38	4664027			DUST COLLECTOR FAN (2 mm ORBIT)
39	4668252			CAPACITOR
40	4673035			SCREW M.8X25
41	4678019			SCREW M.4X16 PH.
42	4679013			SCREW D.4X25 TX
43	4679014			SCREW D.4X10 TX
44	4680057			WASHER D.37X20.2X0.2
45	4699186			DUST RETAINER 275X5X6
46	4699202			RETAINER D27.5XD17X1.5
47	4691072			PACK 50 SANDING SHEETS GR.100
48	7080013			WASHER D.15.2X25X0.1
49	8002043			CORD ARMOR
50	8445208			DUST COLLECTION BAG
51	8622099			PIVOT ROD
52	8623101			PAPER HOLDER
53	8625111			HANDLE ASS'Y
54	8626062			SPRING
55	8678008			SCREW M.4X10 PH.
56	4602419			COVER
57	4650141			WIRING (STATOR-SWITCH)(SHORT)
58	8484009			FAST LOCK D.4
59	4699209			VELCRO PAD
60	6626085	B0	4972	SPRING
61	4604231	C0	5906	JOINT D.41X2.5 mm
62	8404234	D0	11296	JOINT 7.5X3
63	4645855	D0	11296	SET OF COLUMNS ASS'Y (SPARE)
64	4602757	E0	13684	SWITCH LOCKING
65	4626216	E0	13684	SPRING
S/P	4694273			CARTON BOX

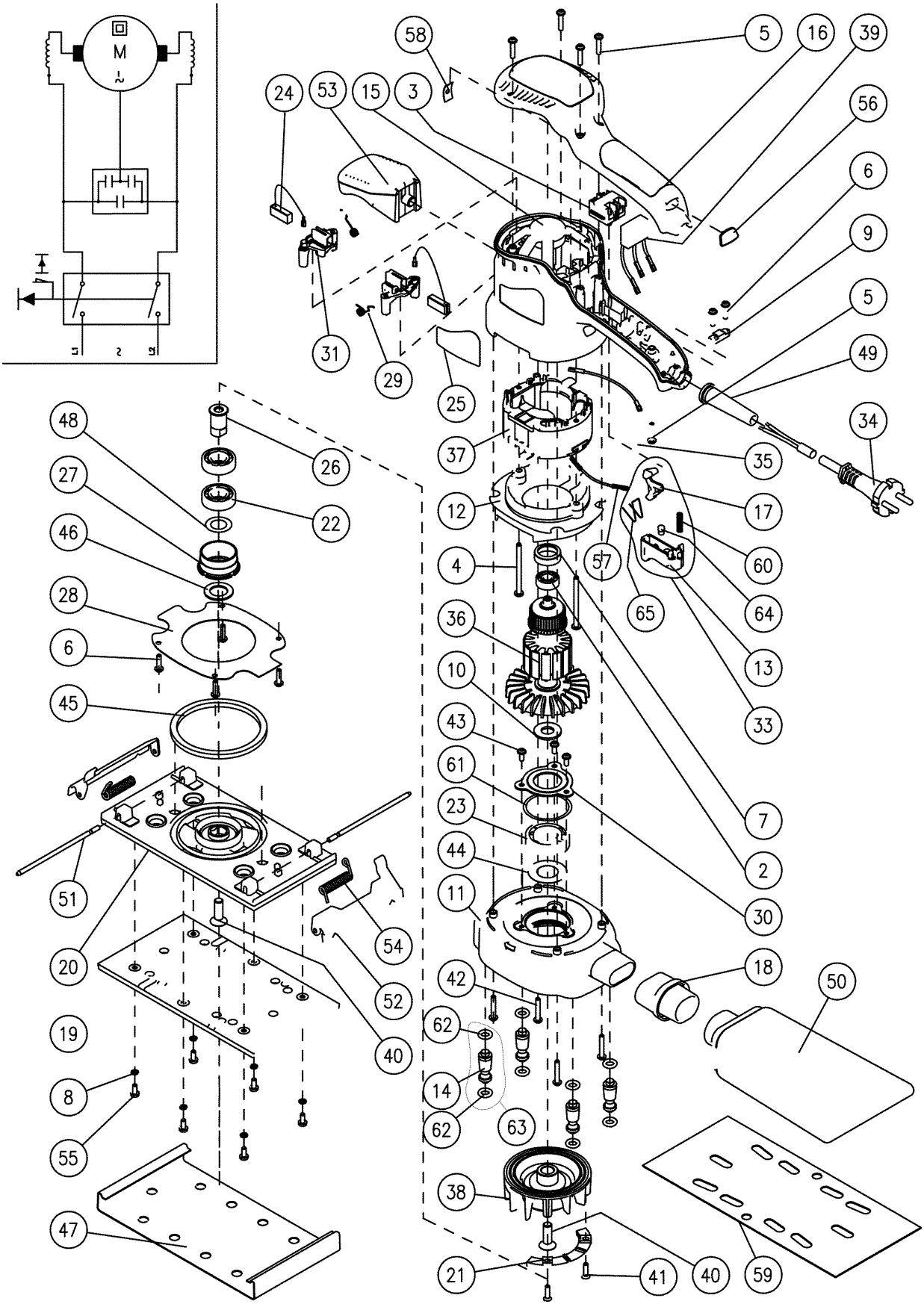
M
58
5
16
39
24
53
15
3
56
6
9
5
49
31
29
25
34
48
26
37
35
27
22
12
17
46
4
57
60
28
65
64
36
13
6
10
33
45
43
61
7
23
2
44
30
51
11
54
20
18
50
42
52
19
62
40
14
8
62
63
55
38
47
21
41
40
59

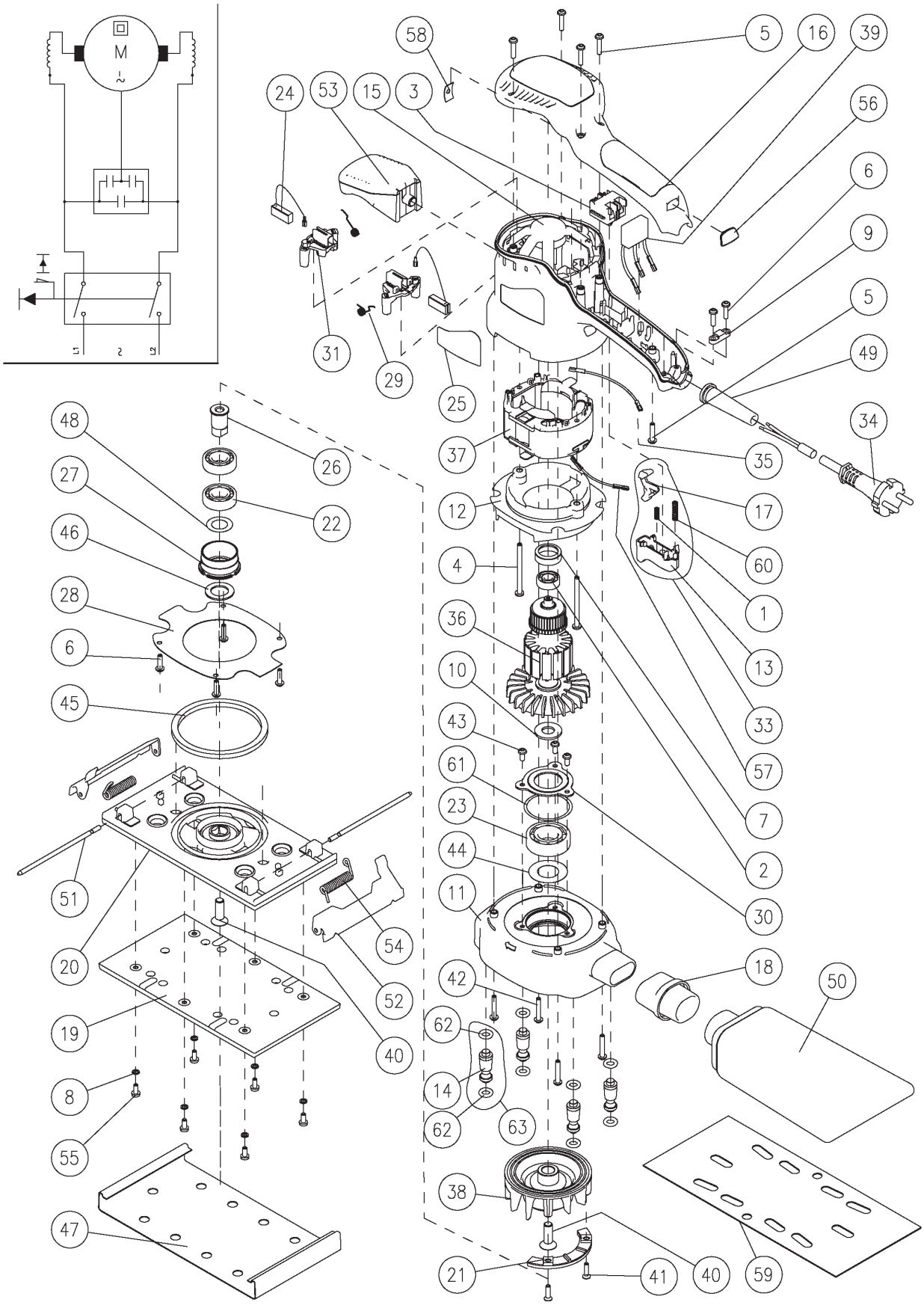
M
~
L1
L2
L3
58
5
16
39
24
53
15
3
56
6
9
5
49
34
31
29
25
37
35
48
26
27
22
12
17
46
4
60
28
1
36
6
13
10
33
45
43
57
61
7
23
2
44
30
11
51
18
50
20
54
42
52
62
19
40
14
8
62
63
55
38
47
21
41
40
59

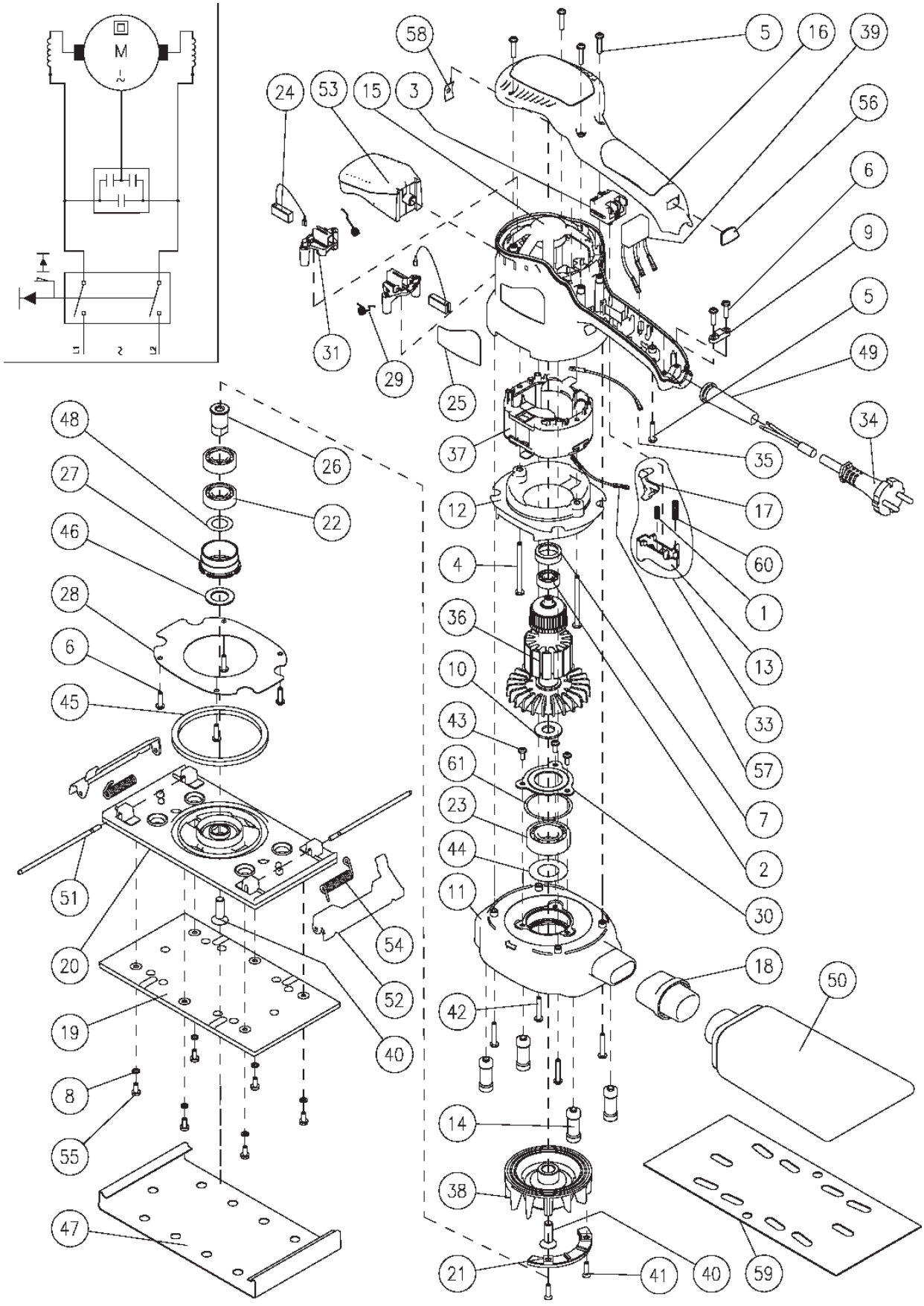
M
58
5
16
39
24
53
15
3
56
6
9
5
49
34
31
29
25
37
35
48
26
27
22
12
17
46
4
60
28
1
36
13
6
10
33
45
43
57
61
7
23
2
44
30
11
51
18
50
20
54
52
42
19
40
8
14
55
38
47
21
41
40
59

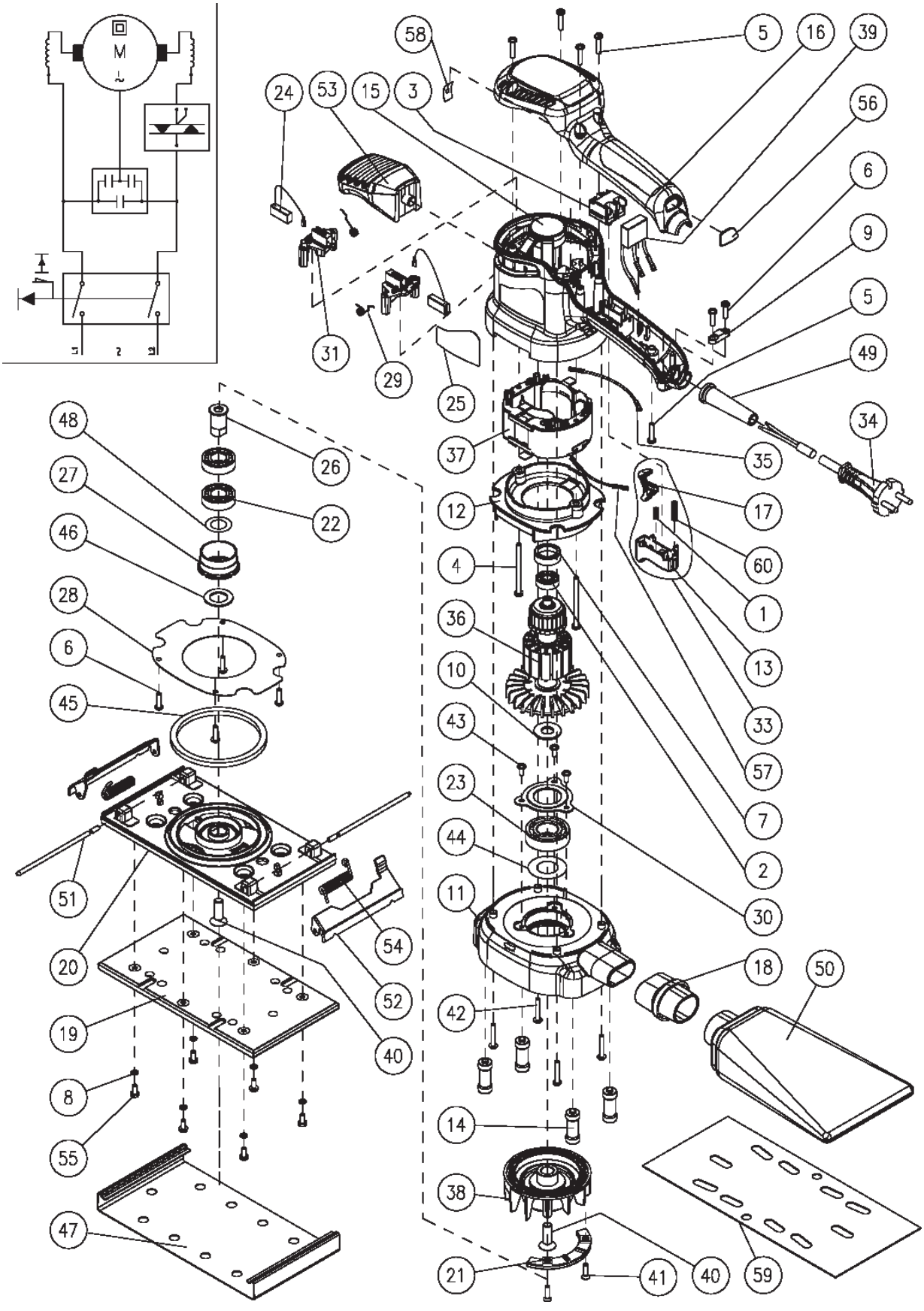
M
58
5
16
39
24
53
15
3
56
6
9
5
49
34
31
29
25
37
35
48
26
27
22
12
17
46
4
60
28
1
36
6
13
10
33
45
43
57
23
7
44
2
51
11
30
54
18
50
20
52
42
19
40
8
14
55
38
47
21
41
40
59

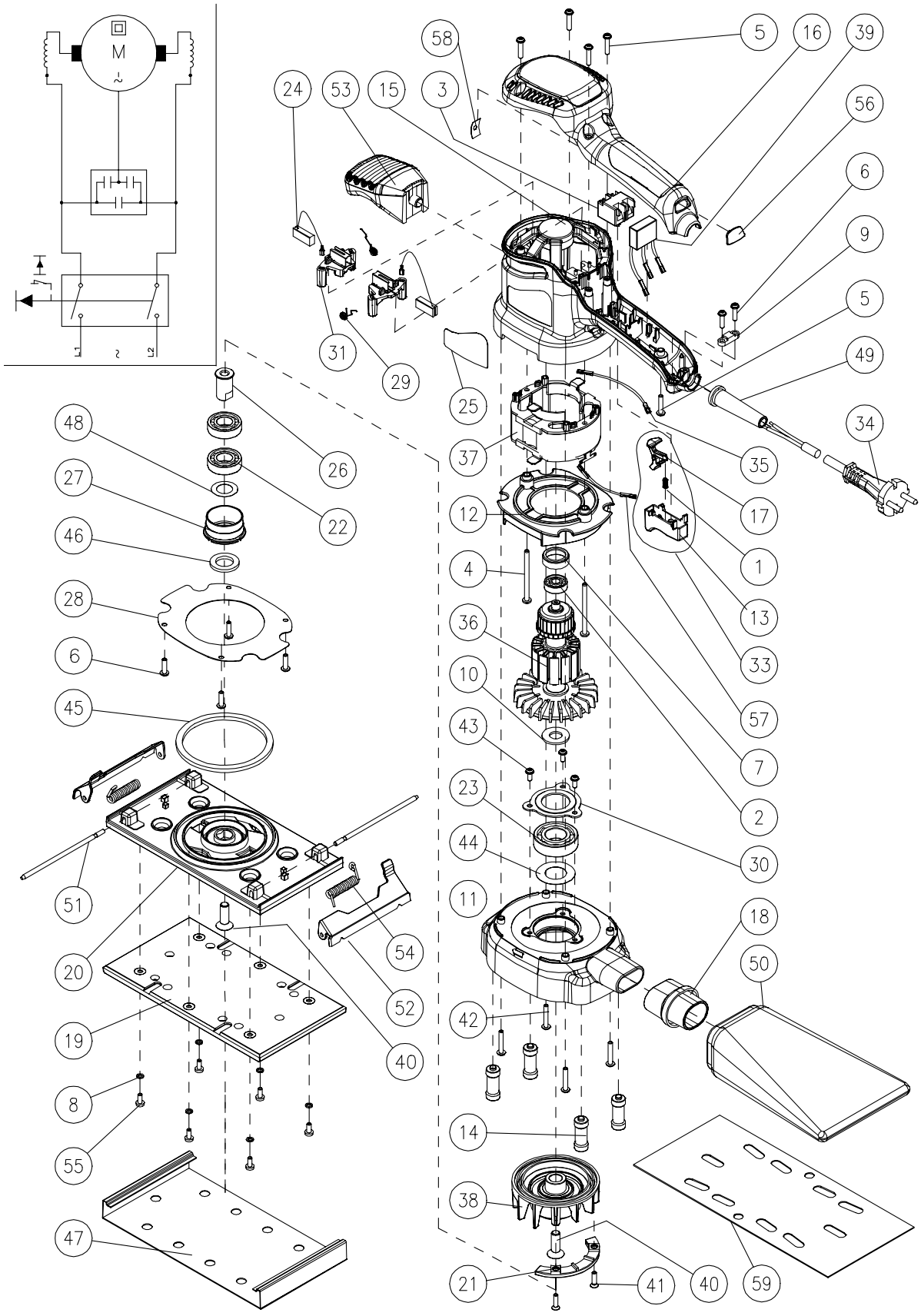
M
L1
L2
58
5
16
39
24
53
15
3
56
6
9
5
49
31
29
25
34
48
26
37
35
27
22
12
17
46
4
1
28
13
36
33
6
10
57
45
43
7
23
2
44
30
51
11
18
20
54
50
52
42
19
40
8
14
55
38
47
21
41
40
59